GARY

Work Order ID 73357

Wednesday, August 31, 2011 11:38:21 AM

Item ID: D4030-041 **Accept** **Setup Start** **Stop**

Revision ID:

Item Name: Long Basket Assembly (350)

Start Date: 8/31/2011 **Start Qty:** 1.00 **Cust Item ID:**

Required Date: 9/12/2011 **Req'd Qty:** 1.00 **Customer:**

Reference:

Approvals: **Process Plan:** CL **Date:** 11/08/31 **Tooling:** **Date:** **Run Start** **Stop**

QC: **Date:** **SPC (Y/N):** **Date:**

Sequence ID/ Work Center ID	Operation Description	Set Up/ Run Hours	Tool ID	Tool #	Plan Code	Accept Qty	Reject Qty	Reject Number	Insp. Stamp
Draw Nbr D4030	**Revision Nbr** C								
100	Pick Kit	0.00				11/9/22			
Packaging	**Memo**	0.00							
Packaging									
110	Assemble as per dwg	0.00				1	0	11/09/22	
HandFinish	**Memo**	0.00							
Hand Finishing	****Mask label plate to size of D4086 label, use scotchbrite red pad to lightly sand area for label, apply label ****								
120	QC5- Inspect part completeness to step on W/O	0.00							
QC	**Memo**	0.00							
Quality Control									

11/09/23

Dart Aerospace Ltd

W/O:		WORK ORDER CHANGES					
DATE	STEP	PROCEDURE CHANGE	By	Date	Qty	Approval Chief Eng / Prod Mgr	Approval QC Inspector

Part No: _____ **PAR #:** _____ **Fault Category:** _____ **NCR:** Yes No **DQA:** _____ **Date:** _____

Resolution: _____ **Disposition:** _____ **QA: N/C Closed:** _____ **Date:** _____

NCR:		WORK ORDER NON-CONFORMANCE (NCR)						
DATE	STEP	Description of NC Section A	Corrective Action Section B			Verification Section C	Approval Chief Eng	Approval QC Inspector
			Initial Chief Eng	Action Description Chief Eng	Sign & Date			

NOTE: Date & initial all entries

H:\fFORMS\Quality Assurance\approved QA\NCRWO RevE

Work Order ID 73357

Wednesday, August 31, 2011 11:38:21 AM

Item ID: D4030-041 **Accept** **Setup Start**

Revision ID: **Stop**

Item Name: Long Basket Assembly (350)

Start Date: 8/31/2011 **Start Qty:** 1.00 **Cust Item ID:**

Required Date: 9/12/2011 **Req'd Qty:** 1.00 **Customer:**

Reference:

Approvals: **Process Plan:** _____ **Date:** _____ **Tooling:** _____ **Date:** _____ **Run Start**

QC: _____ **Date:** _____ **SPC (Y/N):** _____ **Date:** _____ **Stop**

Sequence ID/ Work Center ID	Operation Description	Set Up/ Run Hours	Tool ID	Tool #	Plan Code	Accept Qty	Reject Qty	Reject Number	Insp. Stamp
130	Identify as per dwg & Stock Location:_____	0.00	PPP 73355			11/9/23			
Packaging	Memo	0.00							
Packaging									
140	QC21- Final Inspection - Work Order Release	0.00					11/9/23		
QC	Memo	0.00							
Quality Control							MF 11-09-23		

Dart Aerospace Ltd

W/O:		WORK ORDER CHANGES					
DATE	STEP	PROCEDURE CHANGE	By	Date	Qty	Approval Chief Eng / Prod Mgr	Approval QC Inspector

Part No: _____ **PAR #:** _____ **Fault Category:** _____ **NCR:** Yes No **DQA:** _____ **Date:** _____

Resolution: _____ **Disposition:** _____ **QA: N/C Closed:** _____ **Date:** _____

NCR:		WORK ORDER NON-CONFORMANCE (NCR)						
DATE	STEP	Description of NC Section A	Corrective Action Section B			Verification Section C	Approval Chief Eng	Approval QC Inspector
			Initial Chief Eng	Action Description Chief Eng	Sign & Date			

NOTE: Date & initial all entries

H:\fFORMS\Quality Assurance\approved QA\NCRWO RevE

Picklist Print

Wednesday, August 31, 2011 11:38:18 AM

Work Order ID: 73357

Parent Item: D4030-041

Parent Item Name: Long Basket Assembly (350)

Start Date: 8/31/2011 **Required Date:** 9/12/2011

Start Qty: 1.00 **Required Qty:** 1.00

Comments: IPP Rev:A new issue DD 10.03.23 verified by:EC IPP Rev:B as per dwg revB DD 10.04.20 verified by:EC IPP Rev:C as per dwg revC DD 10.08.18 verified by:EC

Component Item ID/ Item Name	Replacement Item ID	Mfg/ Purch	Bin Item	Primary Location	Last Location	Route Seq ID	Unit of Measure	Qty on Hand	Qty per Kit	Total Qty	Qty Issued	Date Issued	Status
D4086-210 Placard, Max Load		Manufactured	No				Each	9.0000		1			
				Location			**Loc Qty**		**Loc Code**				
				ST122			8						
					66275		8						
				ST124			1						
					64869		1						
D2530 Handle Weldment		Manufactured	No			100	Each	11.0000	1	1			
				Location			**Loc Qty**		**Loc Code**				
				ST506			10						
					72166		10						
				ST508			1						
					69318		1						
D2535 Spring		Manufactured	No			100	Each	85.0000	2	2			
				Location			**Loc Qty**		**Loc Code**				
				ST504			85						
					71117		85						

Dart Aerospace Ltd

W/O:		WORK ORDER CHANGES					
DATE	STEP	PROCEDURE CHANGE	By	Date	Qty	Approval Chief Eng / Prod Mgr	Approval QC Inspector

Part No: _____ **PAR #:** _____ **Fault Category:** _____ **NCR:** Yes No **DQA:** _____ **Date:** _____

Resolution: _____ **Disposition:** _____ **QA: N/C Closed:** _____ **Date:** _____

NCR:		WORK ORDER NON-CONFORMANCE (NCR)						
DATE	STEP	Description of NC Section A	Corrective Action Section B			Verification Section C	Approval Chief Eng	Approval QC Inspector
			Initial Chief Eng	Action Description Chief Eng	Sign & Date			

NOTE: Date & initial all entries

H:\fFORMS\Quality Assurance\approved QA\NCRWO RevE

Picklist Print

Wednesday, August 31, 2011 11:38:18 AM

Work Order ID: 73357

Parent Item: D4030-041

Parent Item Name: Long Basket Assembly (350)

Start Date: 8/31/2011 **Required Date:** 9/12/2011

Start Qty: 1.00 **Required Qty:** 1.00

D2537 Bushing	Manufactured	No	100	Each	29.0000	2	2	

Location	Loc Qty	Loc Code	
ST504	29		
71853	29		2

D3913-041 Long Basket Base Assemby, 350	Manufactured	No	100	Each	0.0000	1	1	B73361 MA (x1) 11/09/22
D3914-041 Long Basket Lid Assembly (350)	Manufactured	No	100	Each	0.0000	1	1	B73359 MA (x1) 11/09/22
D3917-3 Washer	Manufactured	No	100	Each	13.0000	6	6	

Location	Loc Qty	Loc Code	
ST092	13		
72142	13		6

D3953-3 Gas Spring Stud, Lid	Manufactured	No	100	Each	16.0000	2	2	11/9/22

Location	Loc Qty	Loc Code	
ST096	16		
71875	16		2

Dart Aerospace Ltd

W/O:		WORK ORDER CHANGES					
DATE	STEP	PROCEDURE CHANGE	By	Date	Qty	Approval Chief Eng / Prod Mgr	Approval QC Inspector

Part No: _____ **PAR #:** _____ **Fault Category:** _____ **NCR:** Yes No **DQA:** _____ **Date:** _____

Resolution: _____ **Disposition:** _____ **QA: N/C Closed:** _____ **Date:** _____

NCR:		WORK ORDER NON-CONFORMANCE (NCR)						
DATE	STEP	Description of NC Section A	Corrective Action Section B			Verification Section C	Approval Chief Eng	Approval QC Inspector
			Initial Chief Eng	Action Description Chief Eng	Sign & Date			

NOTE: Date & initial all entries

H:\fFORMS\Quality Assurance\approved QA\NCRWO RevE

Picklist Print

Wednesday, August 31, 2011 11:38:18 AM

Work Order ID: 73357

Parent Item: D4030-041

Parent Item Name: Long Basket Assembly (350)

Start Date: 8/31/2011 **Required Date:** 9/12/2011

Start Qty: 1.00 **Required Qty:** 1.00

D3953-7	Manufactured	No	100	Each	13.0000	2	2	
Spring Spacer								

Location	Loc Qty	Loc Code
ST096	13	
65053	4	
71885	9	

D3953-9	Manufactured	No	100	Each	16.0000	2	2	
Gas Spring Washer								

Location	Loc Qty	Loc Code
ST096	16	
69025	4	
71869	12	

D3953-17	Manufactured	No	100	Each	4.0000	2	2	BZ3174
Gas Spring Spacer								

Location	Loc Qty	Loc Code
ST096	4	
71870	4	

D3953-19	Manufactured	No	100	Each	4.0000	1	1	11/9/21
Gas Spring Bracket								

Location	Loc Qty	Loc Code
ST096	4	
59213	1	
68462	3	

Dart Aerospace Ltd

W/O:		WORK ORDER CHANGES					
DATE	STEP	PROCEDURE CHANGE	By	Date	Qty	Approval Chief Eng / Prod Mgr	Approval QC Inspector

Part No: _____ **PAR #:** _____ **Fault Category:** _____ **NCR:** Yes No **DQA:** _____ **Date:** _____

Resolution: _____ **Disposition:** _____ **QA: N/C Closed:** _____ **Date:** _____

NCR:		WORK ORDER NON-CONFORMANCE (NCR)						
DATE	STEP	Description of NC Section A	Corrective Action Section B			Verification Section C	Approval Chief Eng	Approval QC Inspector
			Initial Chief Eng	Action Description Chief Eng	Sign & Date			

NOTE: Date & initial all entries

H:\fFORMS\Quality Assurance\approved QA\NCRWO RevE

Picklist Print

Wednesday, August 31, 2011 11:38:18 AM

Work Order ID: 73357

Parent Item: D4030-041

Parent Item Name: Long Basket Assembly (350)

Start Date: 8/31/2011 **Required Date:** 9/12/2011

Start Qty: 1.00 **Required Qty:** 1.00

D3953-21 Gas Spring Bracket	Manufactured	No	100	Each	3.0000	1	1	

Location	Loc Qty	Loc Code
ST096	3	
68463	3	

D3969-3 Spring (Basket Lid)	Manufactured	No	100	Each	4.0000	1	1	

Location	Loc Qty	Loc Code
ST272	4	
64285	1	
68925	3	

AN3-14A Bolt	Purchased	No	100	Each	76.0000	4	4	

Location	Loc Qty	Loc Code
ST352	76	
117872	76	

AN3-16A Bolt	Purchased	No	100	Each	173.0000	2	2	11/9/21

Location	Loc Qty	Loc Code
ST352	173	
117441	73	
118628	100	

Dart Aerospace Ltd

W/O:		WORK ORDER CHANGES					
DATE	STEP	PROCEDURE CHANGE	By	Date	Qty	Approval Chief Eng / Prod Mgr	Approval QC Inspector

Part No: _____ **PAR #:** _____ **Fault Category:** _____ **NCR:** Yes No **DQA:** _____ **Date:** _____

Resolution: _____ **Disposition:** _____ **QA: N/C Closed:** _____ **Date:** _____

NCR:		WORK ORDER NON-CONFORMANCE (NCR)						
DATE	STEP	Description of NC Section A	Corrective Action Section B			Verification Section C	Approval Chief Eng	Approval QC Inspector
			Initial Chief Eng	Action Description Chief Eng	Sign & Date			

NOTE: Date & initial all entries

H:\fFORMS\Quality Assurance\approved QA\NCRWO RevE

Picklist Print

Wednesday, August 31, 2011 11:38:19 AM

Work Order ID: 73357

Parent Item: D4030-041

Parent Item Name: Long Basket Assembly (350)

Start Date: 8/31/2011 **Required Date:** 9/12/2011

Start Qty: 1.00 **Required Qty:** 1.00

AN5-17A Bolt	Purchased	No	100	Each	114.0000	4	4	

Location	Loc Qty	Loc Code	
ST337	20		4
118422	20		
ST339	94		
117872	44		
118706	50		

AN4-12 Bolt	Purchased	No	100	Each	72.0000	3	3	

Location	Loc Qty	Loc Code	
ST357	72		
117514	22		3
118626	50		

AN310-4 NUT	Purchased	No	100	Each	39.0000	3	3	

Location	Loc Qty	Loc Code	
ST324	39		
118112	39		3

AN310C4 Nut	Purchased	No	100	Each	47.0000	2	2	11/1/21

Location	Loc Qty	Loc Code	
ST324	47		
116741	4		
117395	13		2
118090	10		
118626	20		

Dart Aerospace Ltd

W/O:		WORK ORDER CHANGES					
DATE	STEP	PROCEDURE CHANGE	By	Date	Qty	Approval Chief Eng / Prod Mgr	Approval QC Inspector

Part No: _____ **PAR #:** _____ **Fault Category:** _____ **NCR:** Yes No **DQA:** _____ **Date:** _____

Resolution: _____ **Disposition:** _____ **QA: N/C Closed:** _____ **Date:** _____

NCR:		WORK ORDER NON-CONFORMANCE (NCR)						
DATE	STEP	Description of NC Section A	Corrective Action Section B			Verification Section C	Approval Chief Eng	Approval QC Inspector
			Initial Chief Eng	Action Description Chief Eng	Sign & Date			

NOTE: Date & initial all entries

H:\fFORMS\Quality Assurance\approved QA\NCRWO RevE

Picklist Print

Wednesday, August 31, 2011 11:38:19 AM

Work Order ID: 73357

Parent Item: D4030-041

Parent Item Name: Long Basket Assembly (350)

Start Date: 8/31/2011 **Required Date:** 9/12/2011

Start Qty: 1.00 **Required Qty:** 1.00

MS21042L3 Nut	Purchased	No	100	Each	1,777.000	6	6

Location	Loc Qty	Loc Code
ST300	1777	
117441	160	
117601	400	6
117885	217	
118451	1000	

MS21042L5 Nut	Purchased	No	100	Each	1,076.000	4	4

Location	Loc Qty	Loc Code
ST300	1076	
116105	5	
116548	53	
117441	432	4
117611	90	
118179	496	

MS24665-151 Cotter Pin	Purchased	No	100	Each	418.0000	3	3 11/9/2015

Location	Loc Qty	Loc Code
ST309	418	
17566	418	3

Dart Aerospace Ltd

W/O:		WORK ORDER CHANGES					
DATE	STEP	PROCEDURE CHANGE	By	Date	Qty	Approval Chief Eng / Prod Mgr	Approval QC Inspector

Part No: _____ **PAR #:** _____ **Fault Category:** _____ **NCR:** Yes No **DQA:** _____ **Date:** _____

Resolution: _____ **Disposition:** _____ **QA: N/C Closed:** _____ **Date:** _____

NCR:		WORK ORDER NON-CONFORMANCE (NCR)						
DATE	STEP	Description of NC Section A	Corrective Action Section B			Verification Section C	Approval Chief Eng	Approval QC Inspector
			Initial Chief Eng	Action Description Chief Eng	Sign & Date			

NOTE: Date & initial all entries

H:\fFORMS\Quality Assurance\approved QA\NCRWO RevE

Picklist Print

Wednesday, August 31, 2011 11:38:19 AM

Work Order ID: 73357

Parent Item: D4030-041

Parent Item Name: Long Basket Assembly (350)

Start Date: 8/31/2011 **Required Date:** 9/12/2011

Start Qty: 1.00 **Required Qty:** 1.00

MS24665-300 Cotter Pin	Purchased	No	100	Each	248.0000	2	2	

Location	Loc Qty	Loc Code
GA	200	
118234	200	
ST309	48	
116823	48	

NAS1149F0432P Washer	Purchased	No	100	Each	82.0000	6	6	

Location	Loc Qty	Loc Code
ST275	82	
117291	8	
118612	74	

NAS1149F0563P Washer	Purchased	No	100	Each	180.0000	4	4	

Location	Loc Qty	Loc Code
ST297	180	
117735	180	

NAS1149F0332P WASHER	Purchased	No	100	Each	174.0000	8	8	11/9/21

Location	Loc Qty	Loc Code
ST275	174	
117735	75	
118354	96	
~~17317~~	3	

Dart Aerospace Ltd

W/O:		WORK ORDER CHANGES					
DATE	STEP	PROCEDURE CHANGE	By	Date	Qty	Approval Chief Eng / Prod Mgr	Approval QC Inspector

Part No: _____ **PAR #:** _____ **Fault Category:** _____ **NCR:** Yes No **DQA:** _____ **Date:** _____

Resolution: _____ **Disposition:** _____ **QA: N/C Closed:** _____ **Date:** _____

NCR:		WORK ORDER NON-CONFORMANCE (NCR)						
DATE	STEP	Description of NC Section A	Corrective Action Section B			Verification Section C	Approval Chief Eng	Approval QC Inspector
			Initial Chief Eng	Action Description Chief Eng	Sign & Date			

NOTE: Date & initial all entries

H:\FORMS\Quality Assurance\approved QA\NCRWO RevE

Picklist Print

Wednesday, August 31, 2011 11:38:19 AM

Work Order ID: 73357

Parent Item: D4030-041

Parent Item Name: Long Basket Assembly (350)

Start Date: 8/31/2011 **Required Date:** 9/12/2011

Start Qty: 1.00 **Required Qty:** 1.00

NAS1149C0432R	Purchased	No	100	Each	4,542.000	2	2	1/9/12

Washer

Location	Loc Qty	Loc Code	
ST297	4542		
117291	4542		2

Dart Aerospace Ltd

W/O:		WORK ORDER CHANGES					
DATE	STEP	PROCEDURE CHANGE	By	Date	Qty	Approval Chief Eng / Prod Mgr	Approval QC Inspector

Part No: _____ **PAR #:** _____ **Fault Category:** _____ **NCR:** Yes No **DQA:** _____ **Date:** _____

Resolution: _____ **Disposition:** _____ **QA: N/C Closed:** _____ **Date:** _____

NCR:		WORK ORDER NON-CONFORMANCE (NCR)						
DATE	STEP	Description of NC Section A	Corrective Action Section B			Verification Section C	Approval Chief Eng	Approval QC Inspector
			Initial Chief Eng	Action Description Chief Eng	Sign & Date			

NOTE: Date & initial all entries

H:\fFORMS\Quality Assurance\approved QA\NCRWO RevE

ITEM	QTY -041	QTY -043	P/N	DESCRIPTION
	X		D4030-041	LONG BASKET ASSY (350)
		X	D4030-043	LONG BASKET ASSY, LIGHT LID (350)
1	1	1	D2530	HANDLE WELDMENT
2	2	2	D2535	SPRING
3	2	2	D2537	BUSHING
4	1	1	D3913-041	LONG BASKET BASE ASSY (350)
5	1		D3914-041	LONG BASKET LID ASSY (350)
6		1	D3915-041	LIGHT LID ASSY-LONG BASKET
7	6	6	D3917-3	WASHER
8	2	2	D3953-3	GAS SPRING STUD, LID
9	2	2	D3953-7	GAS SPRING SPACER
10	2	2	D3953-9	GAS SPRING WASHER
11	2	2	D3953-17	GAS SPRING SPACER
12	1	1	D3953-19	GAS SPRING BRACKET
13	1	1	D3953-21	GAS SPRING BRACKET
14	1	1	D3969-3	SPRING
15	4	4	AN3-14A	BOLT
16	2		AN3-16A	BOLT
17		2	AN3-20A	BOLT
18	3	3	AN4-12	BOLT (DRILLED)
19	4	2	AN5-17A	BOLT
20		2	AN5-21A	BOLT
21	3	3	AN310-4	NUT, CASTELLATED
22	2	2	AN310C4	NUT, CASTELLATED
23	6	6	MS21042L3	NUT
24	4	4	MS21042L5	NUT
25	3	3	MS24665-151	COTTER PIN
26	2	2	MS24665-300	COTTER PIN
27	6	6	NAS1149F0432P	WASHER
28	4	4	NAS1149F0563P	WASHER
30	8	8	NAS1149F0332P	WASHER
31	2	2	NAS1149C0432R	WASHER

C

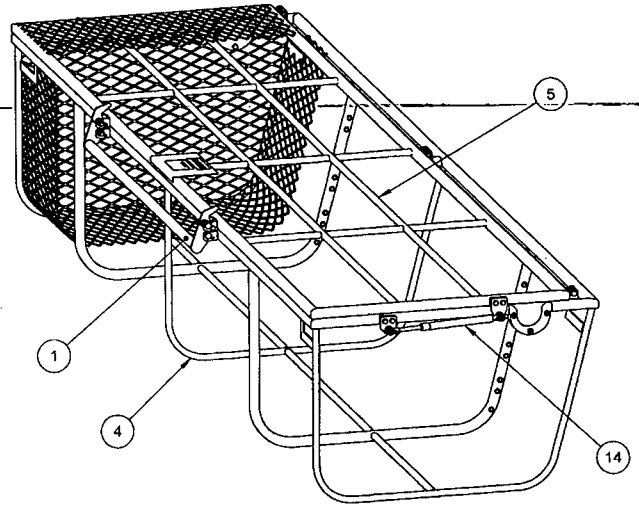

D4030-041 LONG BASKET ASSY (350)
(MESH SHOWN LOCALLY FOR CLARITY)

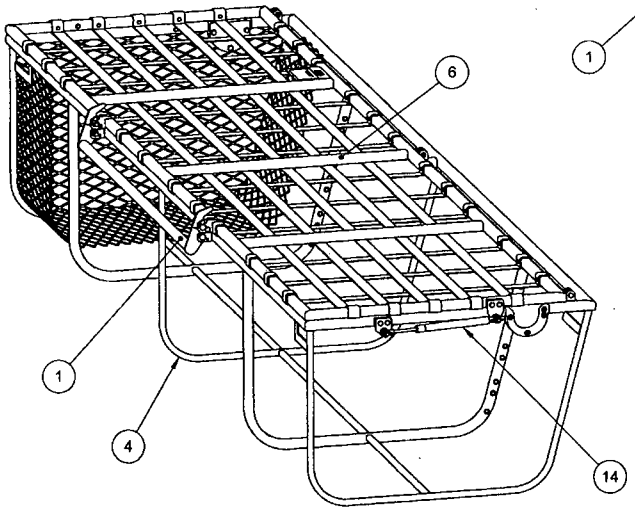

D4030-043 LONG BASKET ASSY, LIGHT LID (350)
(MESH SHOWN LOCALLY FOR CLARITY)

SHOP COPY
RETURN TO
ENGINEERING
UNCONTROLLED COPY
SUBJECT TO AMENDMENT
WITHOUT NOTICE
WORK ORDER
NO. 73357

RELEASED
10.08.12
ECN 10-596

NOTES:
1) MATERIAL: N/A
2) FINISH: NONE
3) TOLERANCES: PER DART QSI 018 UNLESS OTHERWISE NOTED
4) UNITS: INCHES UNLESS OTHERWISE NOTED
5) BREAK SHARP EDGES: N/A
6) IDENTIFICATION: N/A
7) WEIGHT: -041: 72 lbs APPROX
-043: 57 lbs APPROX

REV.	DESCRIPTION	BY	DATE
C	QTY FOR ITEMS #30 & #31 UNDER -043 WERE MISSING (B8-1); QTY FOR ITEM #3 WAS 4 (D6-1), ONLY 2 ARE REQUIRED, AFFECTS SECTION C-C (D3-3).	MB	10.07.23
B	AN5-21A BOLT WAS AN5-19A: BOM & (D3-3)	JPH	10.04.06
A	NEW ISSUE	JPH	10.03.16

DESIGN	AJS	DART AEROSPACE LTD HAWKESBURY, ONTARIO, CANADA
DRAWN		
CHECKED		DRAWING NO. D4030 — REV. C — SHEET 1 OF 3
MFG. APPR.	JFS	
APPROVED		TITLE: LONG BASKET ASSY (350) — SCALE: NTS
DE APPR.		
DATE	10.07.23	

COPYRIGHT © 2010 BY DART AEROSPACE LTD
THIS DOCUMENT IS PRIVATE AND CONFIDENTIAL AND IS SUPPLIED ON THE EXPRESS CONDITION THAT IT IS NOT TO BE USED FOR ANY PURPOSE OR COPIED OR COMMUNICATED TO ANY OTHER PERSON WITHOUT WRITTEN PERMISSION FROM DART AEROSPACE LTD.

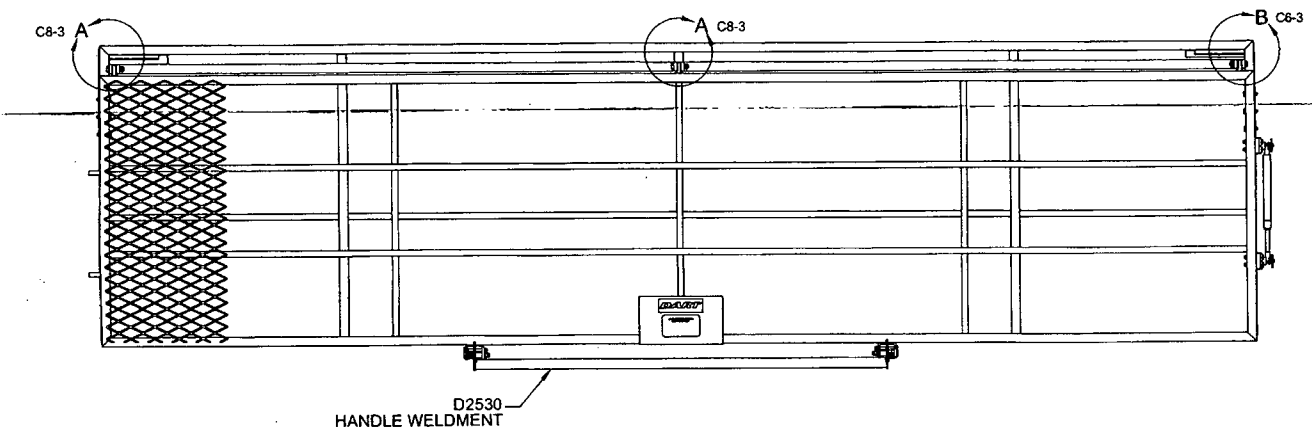

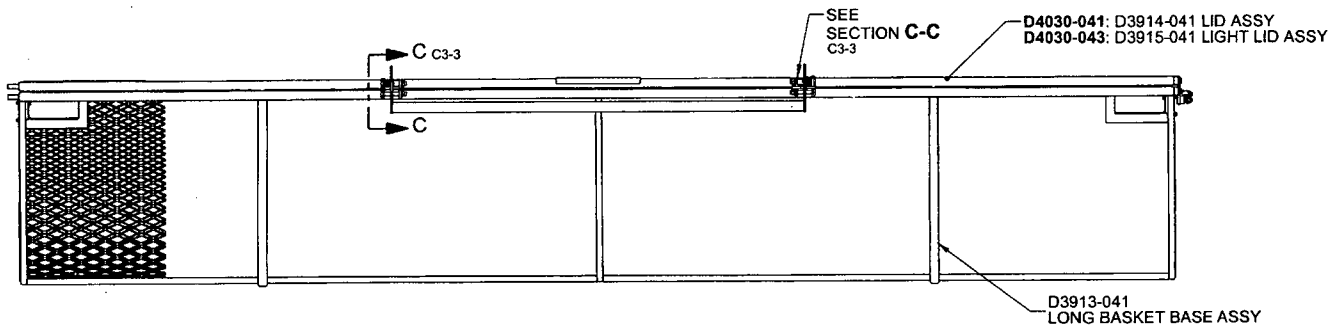

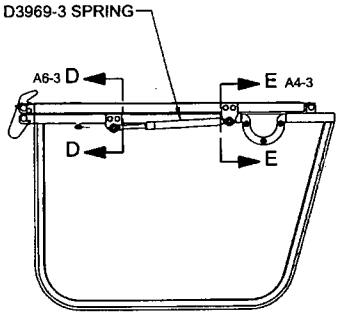

D4030-041 LONG BASKET ASSY (350) (SHOWN)
(MESH SHOWN LOCALLY OR REMOVED FOR CLARITY)

D4030-043 SHORT BASKET ASSY, LIGHT LID (350)
(MESH SHOWN LOCALLY FOR CLARITY)

RELEASED 10.08.12 CP

DESIGN	AJS	**DART AEROSPACE LTD** HAWKESBURY, ONTARIO, CANADA
DRAWN		
CHECKED		DRAWING NO. D4030 — REV. C — SHEET 2 OF 3
MFG. APPR.		
APPROVED		TITLE: LONG BASKET ASSY (350) — SCALE: NTS
DE APPR.		
DATE	10.07.23	

COPYRIGHT © 2010 BY DART AEROSPACE LTD
THIS DOCUMENT IS PRIVATE AND CONFIDENTIAL AND IS SUPPLIED ON THE EXPRESS CONDITION THAT IT IS NOT TO BE USED FOR ANY PURPOSE OR COPIED OR COMMUNICATED TO ANY OTHER PERSON WITHOUT WRITTEN PERMISSION FROM DART AEROSPACE LTD.

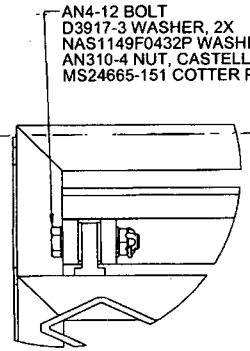

DETAIL A D8-2 D5-2

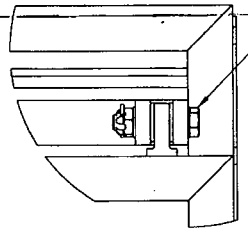

DETAIL B D3-2

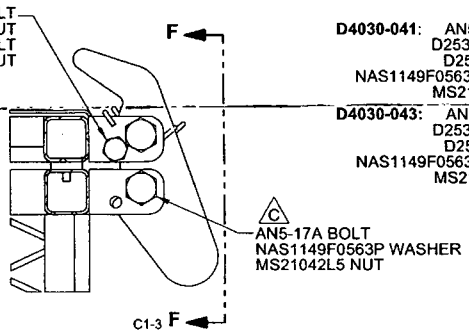

SECTION C-C B4-2 B6-2

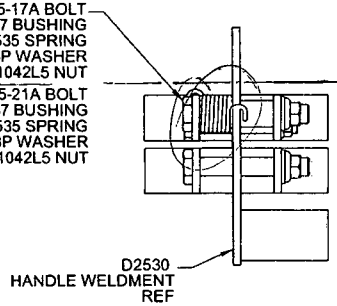

VIEW F-F C3-3

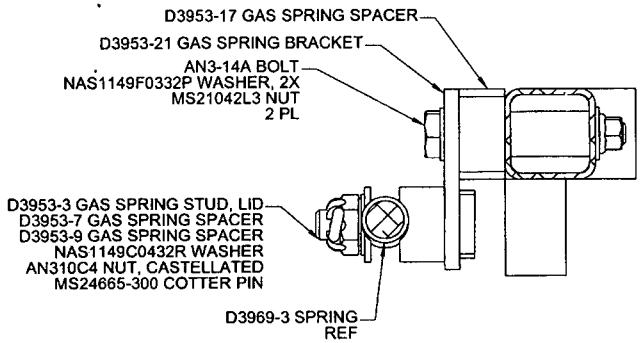

SECTION D-D B2-2

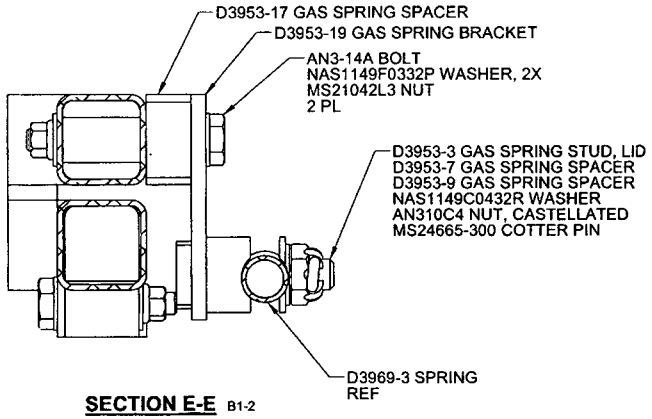

SECTION E-E B1-2

RELEASED
10.08.12

DESIGN	A.S	**DART AEROSPACE LTD** HAWKESBURY, ONTARIO, CANADA
DRAWN		
CHECKED		DRAWING NO. D4030 — REV. C — SHEET 3 OF 3
MFG. APPR.	J.F.S for D.J.L	
APPROVED		TITLE: LONG BASKET-ASSY (350) — SCALE: NTS
DE.APPR.		
DATE	10.07.23	

COPYRIGHT © 2010 BY DART AEROSPACE LTD
THIS DOCUMENT IS PRIVATE AND CONFIDENTIAL AND IS SUPPLIED ON THE EXPRESS CONDITION THAT IT IS NOT TO BE USED FOR ANY PURPOSE OR COPIED OR COMMUNICATED TO ANY OTHER PERSON WITHOUT WRITTEN PERMISSION FROM DART AEROSPACE LTD